GCSDAR

GOLAND CENTURY CO.,LTD

Tel: +86-755-26827242

Web: www.szgoland.net

E-mail: info@szgoland.net

Add: Room 2002, Building 2B,Hejianyungu, No. 8 Xinwang Road, Xinsheng Community, Longgang District, Shenzhen,China

GCSDAR
Goland Century Co., Ltd

Smart DC Refrigerator

Outdoor Cooling Devices Expert

Portable air conditioner ▪ Car refrigerator ▪ Air conditioner cooler/refrigerator ▪ RV refrigerator ▪ Metal chest refrigerator

ABOUT US

COMPANY INTRODUCTION

Located in Longgang District, Shenzhen, GOLAND CENTURY CO.,LTD is one of China's leading manufacturers of car refrigerator, RV refrigerator and portable air conditioner etc.

With a team of skilled engineers and designers, our company has gained a reputation for producing innovative world-class products, offering outstanding OEM/ODM services to global customers.

Our technology team come from top-notch company in car fridge and air conditioner industry, which experience and knowledge give us a competitive edge in developing the latest technologies for our products. We take pride in the quality of our products and the level of customer service we provide. All our products are certified with CE FCC, beyond that, our factory is comply with ISO9001.

With a focus on quality, innovation, and customer satisfaction, we strive to be your trusted partner in China, and we are always looking for new product ideas and concepts. Looking forward to working with you!

CERTIFICATE OF HONOR

CONTENTS

01 • Metal chest refrigerator
CF-T single zone series 01

02 • Air conditioner cooler/refrigerator
MC-A series 02
MC-B series 02

03 • RV refrigerator
RV-A series 03
RV-B series 03

04 • Portable air conditioner
AC-A series 04

05 • Car refrigerator
CF-A series 05
CF-B series 06
CF-C series 07
MC-C series 08

PFT-CF-T

- Metal body for durability
- High efficiency compressor for fast cooling
- Car battery protection
- Extra large storage space
- Built-in internalinduction LED light
- Energy saving

PFT-CF45T/PFT-CF60T/PFT-CF75T/ PFT-CF95T/PFT-CF115T

Control Panel

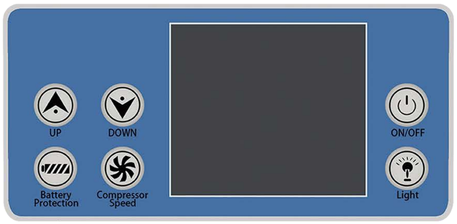

PFT-CF45T

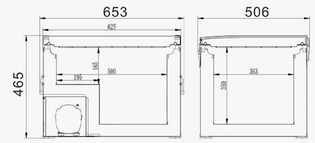

PFT-CF60T

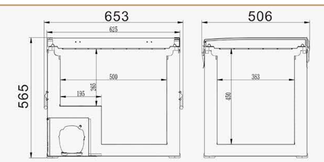

PFT-CF75T

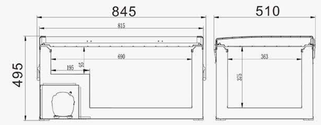

PFT-CF95T

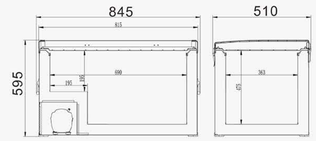

PFT-CF115T

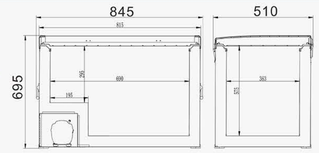

Color White&Argent Customized Colors

Compare models	PFT-CF45T	PFT-CF60T
Product dimensions	L644*W508*H465	L644*W508*H575
Package size	L688*W550*H520	L688*W550*H620
Voltage	DC 12V/24V AC110~240V(Adaptor)	DC 12V/24V AC110~240V
Working Temp	-20℃~20℃	-20℃~20℃
Power	55W(±20%)	55W(±20%)
N.W/G.W	19.5/23.5KG	21.5/24.5KG
Volume	45L	60L

Compare models	PFT-CF75T	PFT-CF95T	Model 型号 PFT-CF115T
Product dimensions	L834*W508*H490	L834*W508*H570	L834*W508*H640
Package size	L880*W550*H547	L880*W550*H627	L880*W550*H707
Voltage	DC 12V/24V AC110~240V	DC 12V/24V AC110~240V	DC 12V/24V AC110~240V
Working Temp	-20℃~20℃	-20℃~20℃	-20℃~20℃
Power	80W(±20%)	80W(±20%)	80W(±20%)
N.W/G.W	24.1/27.1KG	26.1/29.6KG	28.1/32.1KG
Volume	75L	95L	115L

PFT-MC-A/B

- 2-in-1 function, good combination of fridge and air conditioner
- Two adjustable air vents
- Smooth running wheels and handle
- Equipped with cup holder and bottle opener
- With drainage hole to allow water to drain
- Internal induction lighting
- With high performance TYPE-C charging socket

Conditioner Air Cooler/Refrigerator

PFT-MC50A/PFT-MC60A
PFT-MC40B/PFT-MC50B

Control Panel

MC-A

MC-B

PFT-MC50A

PFT-MC60A

PFT-MC40B

PFT-MC50B

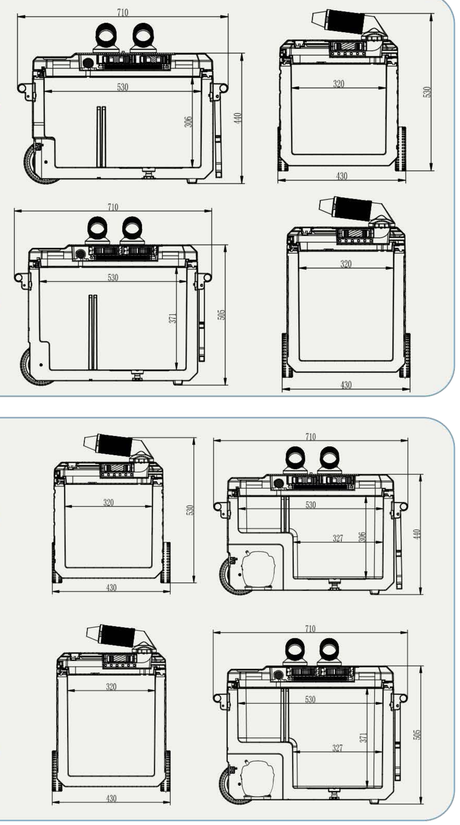

Color

Black blue purple | Brown gray | Dark gray blue violet

Compare models	PFT-MC50A	PFT-MC60A
Product dimensions	L710*W430*H525	L710*W430*H590
Package size	L772*W450*H495	L772*W450*H560
Voltage	DC 12V/24V AC110~240V	DC 12V/24V AC110~240V
Noises	≤45dB	≤45dB
Power	25W(±20%)	25W(±20%)
N.W/G.W	9/10.5KG	10.5/12.5KG
Volume	50L	60L
Refrigerant	ice cube	ice cube

Compare models	PFT-MC40B	PFT-MC50B
Product dimensions	L710*W430*H525	L710*W430*H590
Package size	L772*W450*H495	L772*W450*H560
Voltage	DC 12V/24V AC110~240V	DC 12V/24V AC110~240V
Noises	≤45dB	≤45dB
Power	65W(±20%)	65W(±20%)
N.W/G.W	16/17.5KG	17.5/20KG
Volume	45L	55L
Refrigerant	Compressor refrieration	Compressor refrieration

PFT-RV-A/B

- Dual zones allow both freezing and refrigeration, with water collection in the freezing zone
- Low noise and energy saving
- Multi-level adjustable shelf to accommodate items of different sizes
- High efficiency compressor for fast cooling
- Internal induction lighting, automatic lighting
- Mechanicaltemperature control

RV Refrigerator

PFT-RV65A/PFT-RV65B

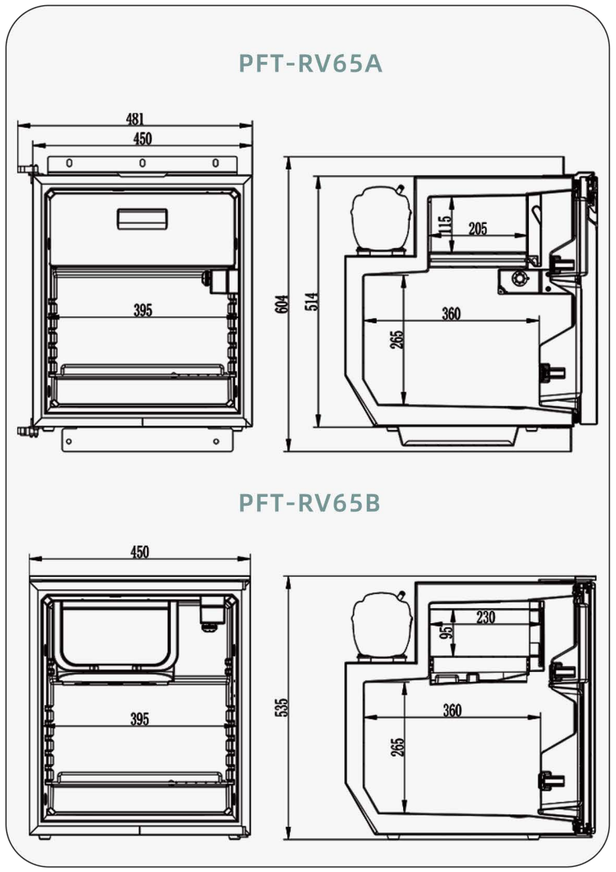

Color | Black | Customized Colors

Compare models	PFT-RV65A	PFT-RV65B	PFT-RV108A
Product dimensions	L481*W517*H604	L450*W508*H535	L430*W440*H810
Package size	L531*W567*H670	L500*W558*H600	L500*W490*H880
N.W	16KG	17.5KG	21.5KG
G.W	17.3KG	19.3KG	23.4KG
Working Temp	-20℃~20℃	-20℃~20℃	-20℃~ 20℃
Refrigerant	R134a /R600/1234yf	R134a /R600/1234yf	R134a /R600/1234yf
Volume	65L	65L	28+80L
Power	55W(±20%)	55W(±20%)	55W(±20%)
Voltage	DC 12V/24V	DC 12V/24V	DC 12V/24V

PFT-AC-A

- 2-in-1 functions, good combination of air conditioner and dehumidifier;
- Cooling temperature range: 16°C-30°C(60.8°F-86°F);
- Plug and play, no installation required, easy to move anywhere;
- High efficiency advanced compressor for fast cooling;
- Modern design with stylish LED strip decoration;
- Four optional cooling modes: Fan, Max, Eco, Sleep;
- Extra quiet operation, less than 48dB in sleep mode;

Portable Air Conditioner

PFT-AC300A/PFT-AC450A/PFT-AC500A

Control Panel

PFT-CF300-500A

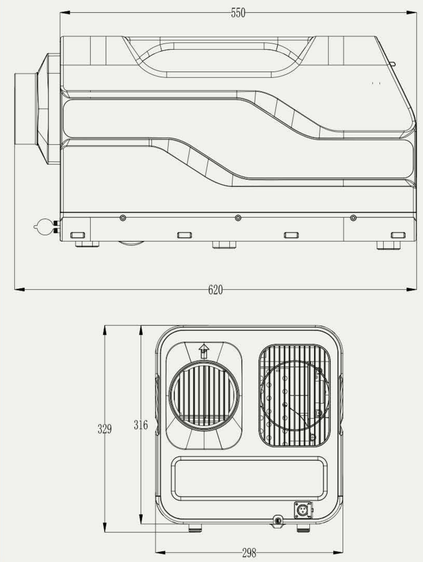

Color: White&Black | White&Gray | Customized Colors

Compare models	PFT-AC300A	PFT-AC450A	PFT-AC500A
Product dimensions	L568*W298*H329	L568*W298*H329	L568*W298*H329
Package size	L615*W345*H490	L615*W345*H490	L615*W345*H490
N.W	10.5KG	14.8KG	12.5KG
G.W	11.8KG	16.2KG	14.8KG
Working temperature	16℃~-30℃	16℃~-30℃	16℃~-30℃
Cooling capacity	750W(3000BTU)	1250W(4500BTU)	1450W(5000BTU)
Rated current	12A	1.6A/3.2A	12A
Rated Power	240W(±20%)	420W(±20%)	485W(±20%)
Voltage	DC 24V,AC100~240V	AC220V/120V	DC 48V,AC100~240V
Refrigerant	R134a/150g	R290a/80g	R290a/120g
FCL Quantity	255pcs/630pcs	255pcs/630pcs	255pcs/630pcs

Standard Accessories

PFT-CF-A

- Dual zone divided by removable cutting board, freezing zone and cooling zone with dual temperature display (Celsius or Fahrenheit);
- High efficiency compressor for rapid cooling;
- Quiet operation, less than 45db;
- Ultra-thick insulation layer to block heat;
- Car battery protection;
- Built-in internal induction LED light;
- Premium material for durability;

PFT-CF30A/PFT-CF40A/PFT-CF50A

Control Panel

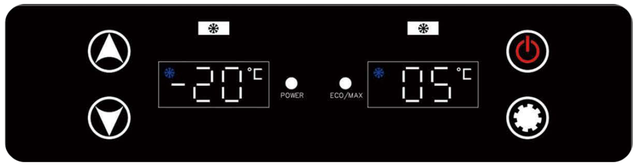

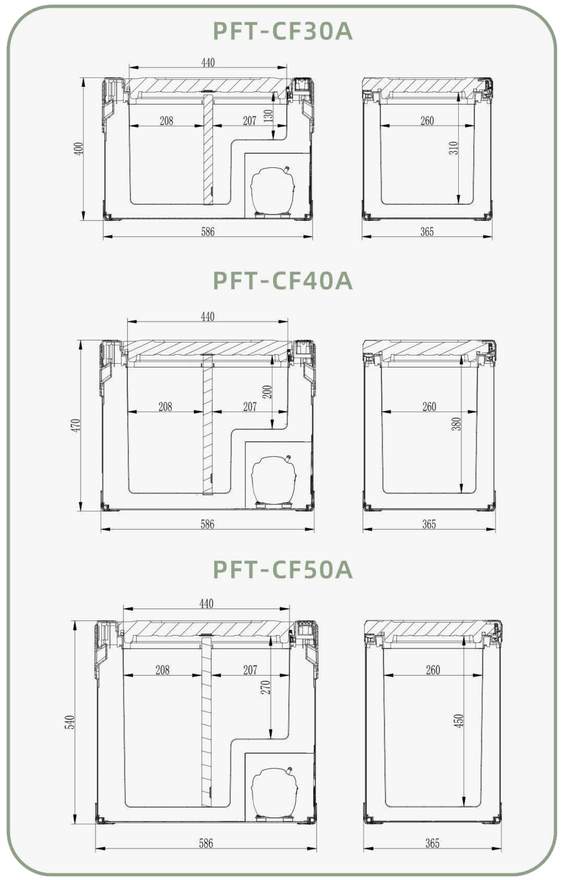

Color | Pine Black | Green | Customized Colors

Compare models	PFT-CF30A	PFT-CF40A	PFT-CF50A
Product dimensions	L586*W365*H400	L586*W365*H470	L586*W365*H540
Package size	L670*W440*H471	L670*W440*H541	L670*W440*H611
N.W	14.8KG	16.5KG	17.9KG
G.W	16.3KG	19.2KG	21.2KG
Working Temp	-20℃~20℃	-20℃~20℃	-20℃~20℃
Refrigerant	R134a /R600/1234yf	R134a /R600/1234yf	R134a /R600/1234yf
Noises	≤45dB	≤45dB	≤45dB
Power	55W(±20%)	55W(±20%)	55W(±20%)
Voltage	DC 12V/24V,AC110~240V (Adaptor)	DC 12V/24V,AC110~240V (Adaptor)	DC 12V/24V,AC110~240V (Adaptor)
Volume	30L	40L	50L
FCL Quantity	243pcs/510pcs	196pcs/408pcs	147pcs/408pcs

PFT-CF-B

- Intelligent dual-zone design fridge and freezer compartments areindividually controlled and displayed
- Adjustable bi-directional door opening design
- Designed with a cup holder and bottle opener
- Car fridge with smooth-running wheels and handle
- Internal induction lighting
- With drainage hole to drain water

Car Refrigerator

PFT-CF35B/PFT-CF45B/PFT-CF55B

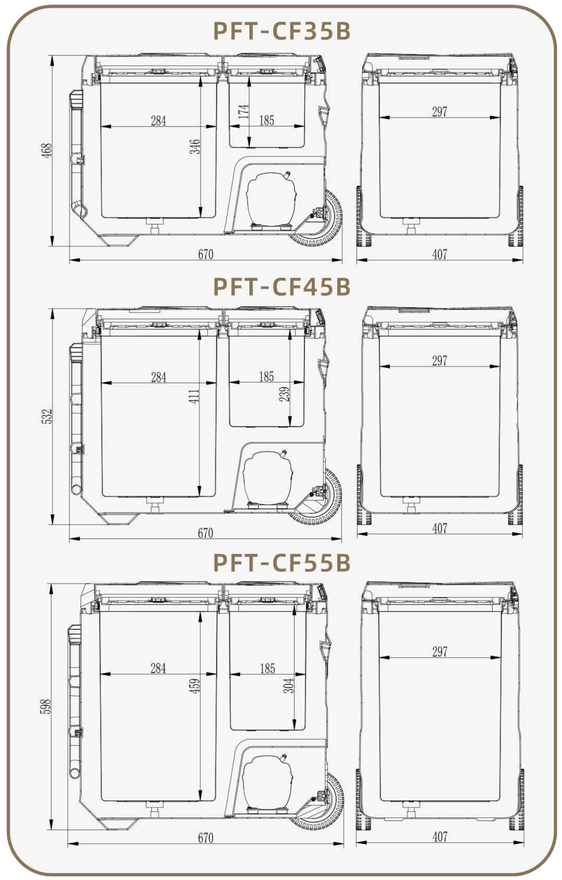

Control Panel

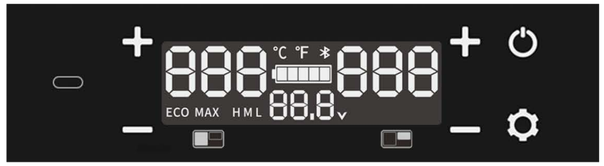

Color | Green | Customized Colors

Compare models	PFT-CF35B	PFT-CF45B	PFT-CF55B
Product dimensions	L670*W407*H468	L670*W407*H532	L670*W407*H598
Package size	L720*W457*H533	L720*W457*H597	L720*W457*H662
N.W	13.5KG	15.5KG	17.5KG
G.W	15KG	17.5KG	20KG
Working Temp	-20℃~20℃	-20℃~20℃	-20℃~20℃
Refrigerant	R134a /R600/1234yf	R134a /R600/1234yf	R134a /R600/1234yf
Volume	40L	50L	60L
Power	55W(±20%)	55W(±20%)	55W(±20%)
Voltage	DC 12V/24V,AC110~240V	DC 12V/24V,AC110~240V	DC 12V/24V,AC110~240V

Standard Accessories

PFT-CF-C

- Portable compressor car fridge
- Single zone design
- Car fridge with smooth-running wheels and handle
- Small size with low weight

PFT-CF18C/PFT-25C

Control Panel

PFT-CF18C

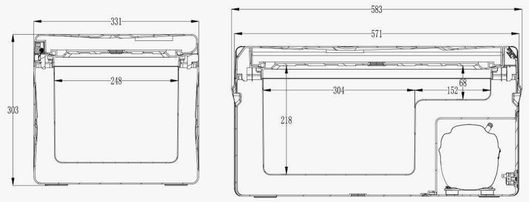

PFT-CF25C

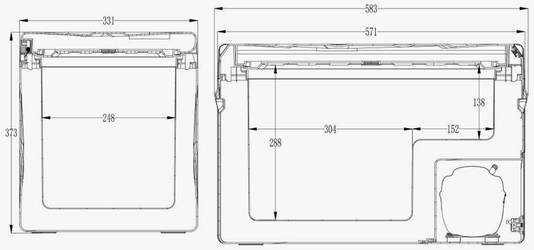

Color | Celadon | Customized Colors

Compare models	PFT-CF18C	PFT-CF25C
Product dimensions	L583*W331*H303	L583*W331*H373
Package size 包装尺寸	L633*W341*H318	L633*W341*H388
N.W	9.8KG	11.2KG
G.W 毛重	11.3KG	13.2KG
Working Temp	-20℃~20℃	-20℃~20℃
Refrigerant 制冷剂	R134a /R600/1234yf	R134a /R600/1234yf
Volume	18L	25L
Power 功率	55W(±20%)	55W(±20%)
Voltage	DC 12V/24V,AC110~240V	DC 12V/24V,AC110~240V

Standard Accessories

PFT-MC-C

- Car fridge with smooth-running wheels and handle
- Designed with a cup holder and bottle opener
- Touch panel controls
- With drainage hole to drain water
- Internalinduction lighting
- With high power TYPE-C charging port

PFT-MC40C/PFT-MC50C

Control Panel

PFT-MC40C

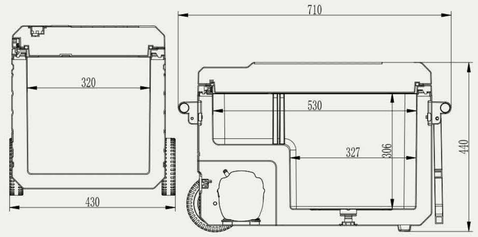

PFT-MC50C

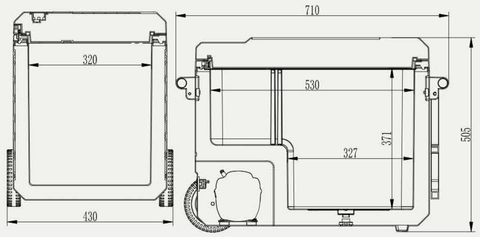

Color

White&Black | White&Gray | Customized Colors

Compare models	PFT-MC40C	PFT-MC50C
Product dimensions	L710*W430*H440	L710*W430*H505
Package size	L772*W450*H495	L772*W450*H560
N.W	14.5KG	16KG
G.W	16KG	18.5KG
Working Temp	-20℃~ 20℃	-20℃~ 20℃
Volume	40L	50L
Refrigerant	R134a/R600/1234yf	R134a/R600/1234yf
Rated Power	55W(±20%)	55W(±20%)
Voltage	DC 12V/24V,AC110~240V	DC 12V/24V,AC110~240V

Standard Accessories